Review

Biodiversity and disease: a synthesis of ecological perspectives on Lyme disease transmission

Chelsea L. Wood[1] and Kevin D. Lafferty[2]

[1] Department of Biology, Stanford University, Stanford, CA 94305, USA
[2] US Geological Survey, Western Ecological Research Center, c/o Marine Science Institute, University of California, Santa Barbara, CA 93106, USA

Recent reviews have argued that disease control is among the ecosystem services yielded by biodiversity. Lyme disease (LD) is commonly cited as the best example of the 'diluting' effect of biodiversity on disease transmission, but many studies document the opposite relationship, showing that human LD risk can increase with forestation. Here, we unify these divergent perspectives and find strong evidence for a positive link between biodiversity and LD at broad spatial scales (urban to suburban to rural) and equivocal evidence for a negative link between biodiversity and LD at varying levels of biodiversity within forests. This finding suggests that, across zoonotic disease agents, the biodiversity–disease relationship is scale dependent and complex.

Can biodiversity protect humans against disease?

Does anthropogenic biodiversity loss generally increase or decrease zoonotic disease transmission? This is a contentious question in disease ecology, and its answer is not only of theoretical interest, but also reveals whether biodiversity conservation could be deployed as an effective approach for disease control. LD has become a major focus in this controversy. Understanding how to interrupt transmission of LD (which is caused by the spirochete pathogen *Borrelia burgdorferi* and vectored by ticks) is important because the disease affects thousands of people in the northeastern USA and, if not treated quickly, can lead to serious health complications [1]. However, published studies differ considerably in their estimation of the most effective approach for LD control. Early work on the ecology of LD focused on the relationship between LD transmission and land use: epidemiological studies found positive spatial correlations between forested land and human LD cases (e.g., [2–10]), and proposed clearing of vegetation, controlled burns, and culling of reservoir hosts as the most efficient ways to reduce transmission [11,12]. Later, the 'dilution effect' hypothesis emerged, which proposed that, by limiting the relative abundance of highly competent reservoir hosts, biodiverse ecosystems could 'buffer' LD transmission [13–19]. This body of work led to calls for the use of forest conservation as a tool for reducing human LD risk [15,19,20], as well as the risk of other zoonotic diseases [21–25]. These opposing views on the ecology of LD transmission imply opposite approaches to its control: forest and biodiversity destruction on one hand, and forest and biodiversity conservation on the other.

Here, we review the 'traditional' and the 'dilution effect' perspectives, as well as recent efforts to synthesize insights from each. We do not intend to imply that research on LD is conducted by mutually exclusive camps unaware of, or resistant to, considering one another's work, only that studies published on LD have emphasized different mechanisms, metrics, and scales. These two perspectives come to opposite conclusions in part because they focus on variation in risk at different spatial resolutions. Our synthesis suggests that, at coarse spatial resolutions (e.g., rural versus suburban versus urban land uses), LD risk increases with increasing forestation, as predicted by the traditional perspective. Meanwhile, some authors claim that, within forests, the dilution effect could decrease some measures of LD as forest biodiversity increases. Merging these perspectives leads to a nuanced yet testable hypothesis about how LD risk changes with human disturbance of ecosystems. This synthesis provides a more refined understanding of how one might intervene in the transmission cycle to reduce the risk of LD infection, with implications for the relationship between biodiversity and infectious disease in general.

LD transmission

The complex transmission cycle of LD is now well known. The pathogen is a spirochete bacterium, *B. burgdorferi*, which is vectored by ixodid ticks. Although the ticks are generalized feeders and can take blood meals from many forest vertebrates, they tend to use small animals in their early life stages and large animals in the adult stage [26]. In the northeastern USA, many black-legged tick larvae and nymphs (*Ixodes scapularis*) feed on the white-footed mouse (*Peromyscus leucopus*), whereas the primary and most productive hosts for adult ticks are white-tailed deer (*Odocoileus virginianus*) [26]. However, both larval and nymphal ticks will feed on other mammals (e.g., chipmunks, squirrels, and shrews) and on birds, an adaptation that maintains tick populations and LD transmission during the crash phase of mouse population cycles. Although

Corresponding author: Wood, C.L. (CLWood@stanford.edu).

larval, nymphal, and adult ticks will all attempt to feed on humans, larvae and nymphs are more likely to complete undetected blood meals on human hosts because of their small size [27]. Because *B. burgdorferi* is not vertically transmitted in ticks and, therefore, larvae are uninfected, most infections are transmitted to humans by the nymphal stage of the tick.

An approach for reconciling divergent perspectives on the relationship of biodiversity to LD risk

Here, we outline the traditional and dilution effect perspectives, illustrate them with path diagrams (Figure 1) and transmission cycles (Figure 2), and place them in their historical context (Box 1). We then present a synthetic, cohesive framework for the dependence of human LD risk on biodiversity, with an emphasis on the importance of spatial resolution in understanding this relationship. We find strong evidence for a positive link between biodiversity and disease at broad spatial scales (urban to suburban to rural) and equivocal evidence for a negative link between biodiversity and disease at varying levels of biodiversity within forests.

This finding has important implications for the understanding of how anthropogenic biodiversity loss drives change in human disease risk for other zoonotic diseases. Support for the dilution effect in LD has been extrapolated to make the argument that biodiversity should buffer against many zoonotic disease agents, and reviews making this argument often cite studies of LD as their principal evidence (e.g., [16,19,21–25]). Our synthesis overturns this

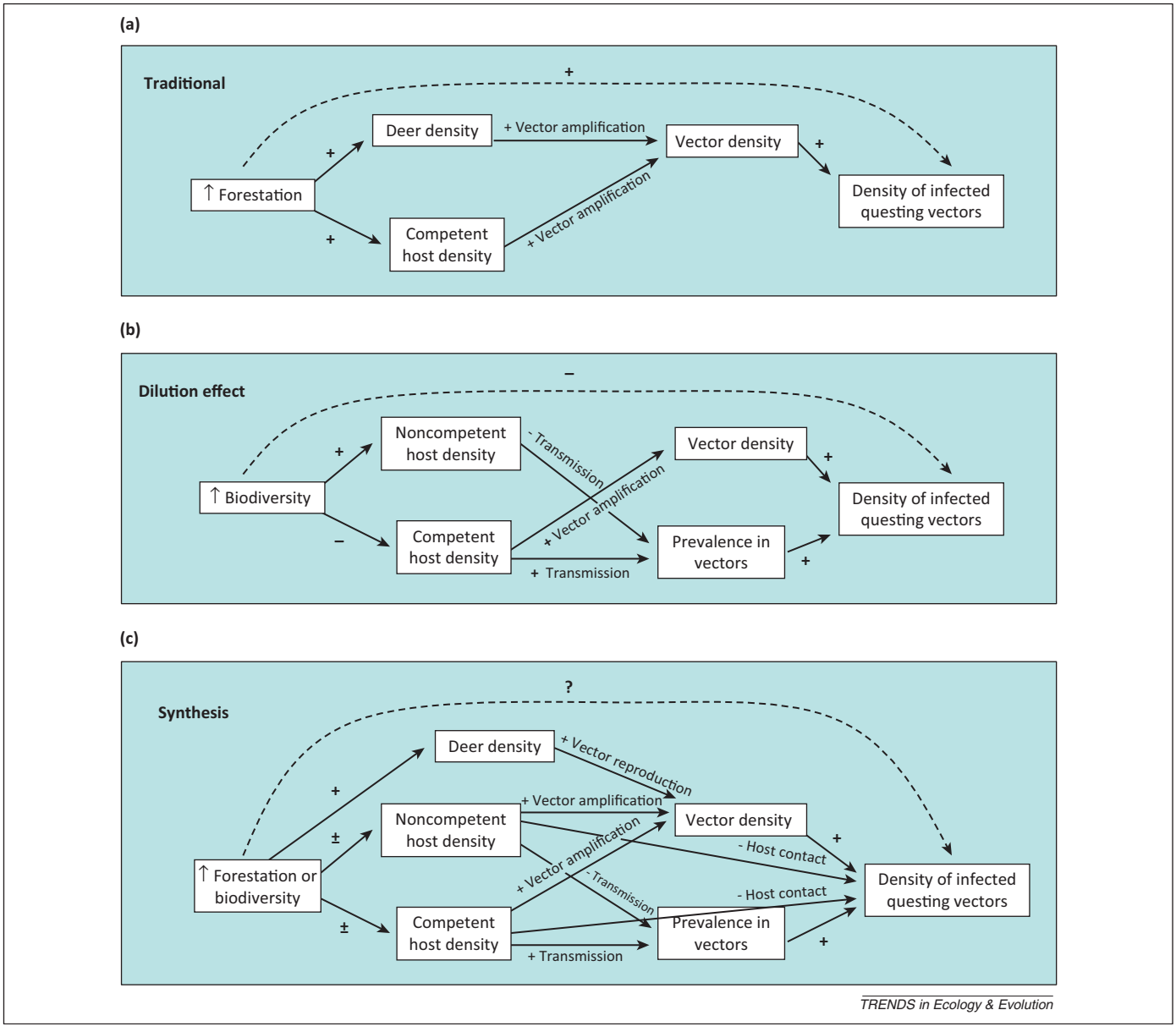

Figure 1. Path diagrams for three perspectives on how ecosystem disturbance alters the risk of Lyme disease (LD): **(a)** the traditional perspective, **(b)** the dilution effect perspective, and **(c)** the synthetic perspective. In all cases, risk to human health is best measured as the density of infected questing vectors (which is the product of nymphal tick infection prevalence and nymphal tick density). This is important to emphasize, because studies sometimes equate either tick density or prevalence with human disease risk, when it is instead their product that best predicts risk. For each path (i.e., arrow), the sign indicates whether the relationship between two variables is negative, positive, or either. To assess the overall indirect effect of increasing forestation and/or biodiversity on the density of infected vectors, signs along each compound path (i.e., all paths within a particular pathway between the two endpoints) are multiplied.

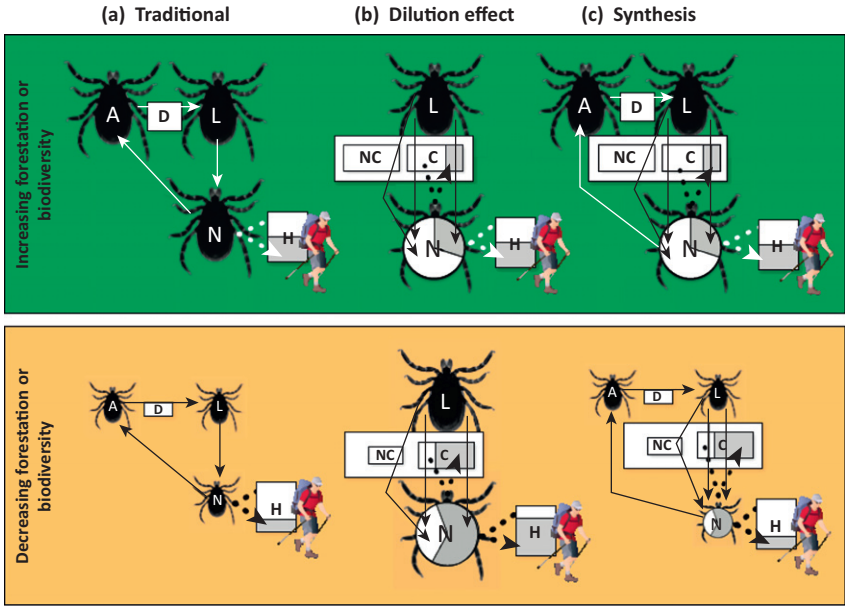

Figure 2. The Lyme disease (LD) transmission cycle, according to three perspectives on how ecosystem disturbance alters the risk of LD. Circles and/or tick images represent tick stages (A, adult; L, larva; and N, nymph). Squares represent hosts (D, deer; H, humans; C, competent hosts; and N, noncompetent hosts). The size of a shape and/or image suggests abundance. Shading represents the proportion of hosts infected with *Borrelia burgdorferi*. Some parts of the life cycle are simplified. In particular, other large mammals besides deer can be hosts for adult ticks and nymphs will also feed on large mammals. Image of hiker reproduced, with permission, from Tracey Saxby, Integration and Application Network, University of Maryland Center for Environmental Science (ian.umces.edu/imagelibrary).

Box 1. Historical ecology of Lyme disease

Current evidence suggests that LD has affected human populations since antiquity, that it was prevalent in northeastern North America before European colonization, and that its recent resurgence in that region accompanied restoration of disturbed landscapes. This historical perspective contradicts the hypothesis that LD is emerging in response to human disturbance of natural ecosystems.

An ancient disease

LD was first recognized in the USA in 1977, among patients living in and around Lyme, CT [64]. Although the sudden notoriety of LD during the late 1970s suggested to many that the disease must be introduced, later research demonstrated that its symptoms had been known for some time. The skin rash characteristic of the disease, in combination with arthritis-like complaints, had been noted among patients in Europe since at least 1882 [65] and *Borrelia burgdorferi* might have infected the Tyrolean Iceman, a 5300-year-old Copper-age individual preserved in the ice of the Italian Alps [66]. LD symptoms were so common on the eastern end of Long Island that they were locally called 'Montauk knee' and 'Montauk spider bite' in the years before the disease was named 'Lyme' [67].

Resurgence of LD in the northeastern USA in response to post-agricultural reforestation

LD probably affected humans living in North America before the arrival of European colonists, although the abundance of the spirochete seems to have waned and waxed in response to changes in the extent of forested area and abundance of deer across the continent [33,68]. In 1749, a naturalist describing the fauna of central New York reported a tick species matching characters of black-legged ticks, writing, 'The woods abound with Woodlice [sic], which were extremely troublesome to us…Scarcely any one of us sat down but a whole army of them crept upon his clothes' [69]. However, by the mid-1800s, this tick had disappeared from the entire northeastern region of the USA. Writing in 1872, an entomologist for the New York State Agricultural Society observed, 'The most common tick of our country, the wood [black-legged] tick…though formerly abundant throughout the northern and middle states, has now become nearly or quite extinct' [70]. The demise of the tick was linked to the conversion of forest to farmland, first by American Indians and later by European colonists [71]. As these environmental changes proceeded, agricultural conversion drove out the white-footed mouse and intensive hunting pressure nearly extirpated white-tailed deer; as its two primary hosts went, so went the black-legged tick and so, presumably, went the spirochete [68,72]. During this period of extreme anthropogenic pressure on native biodiversity, the deer, the tick, and the spirochete all persisted in isolated spatial refuges. White-footed mice and white-tailed deer examined in 1946 on the remote eastern end of Long Island, NY, carried black-legged ticks [73]. When museum specimens of the mouse-borne ticks were screened for DNA of the spirochete decades later, 47% of them were infected with *B. burgdorferi* [67]. Marshall *et al.* [74] screened for *B. burgdorferi* DNA in museum specimens of the white-footed mouse collected between 1870 and 1919 from across the eastern seaboard and found a single focus of infection: Dennis, MA, on Cape Cod. Indeed, molecular genetic evidence suggests that *B. burgdorferi* experienced a population bottleneck, probably coincident with the reductions in reservoir host and vector populations brought on by the conversion of North American forest to farmland [75]. During the early 1900s, as hunting pressure abated, agriculture shifted to other regions of the country, and forests returned to the northeastern USA, the black-legged tick was rediscovered [76] and, later, the species was documented throughout an expanding range within the eastern USA. Deer populations increased through the reforested northeast and had reoccupied most of the eastern seaboard by the 1950s [71]. These historical data suggest, but do not confirm, that LD persisted in isolated spatial refuges during periods of intensive agricultural land use during the 1800s and early 1900s, and that it re-expanded with reforestation of the northeastern USA.

understanding of zoonotic disease transmission, emphasizing the complexity and scale dependence of the biodiversity–disease relationship and demonstrating that the relationship might be negative, positive, or neutral, depending on the context. This should prompt a broad re-evaluation of the link between biodiversity and zoonotic disease risk.

The traditional perspective

Although the historical ecology of LD was not understood until years after the disease was first identified in 1977 (Box 1), links between LD and forests were widely recognized in the literature, even in the earliest days of the LD epidemic. In one of the first investigations of the ecology of LD and its hosts, Wallis *et al.* [28] wrote, 'Patients have clustered in sparsely settled, often wooded, rural areas of southeastern Connecticut.' When ecologists and epidemiologists set out to assess environmental risk factors for LD, the location of one of the early disease foci was a clue: many early LD cases clustered around a nature preserve in Ipswich, MA, where 35% of residents were infected, with the bulk of cases among those residents living closest to the preserve [2]. Consistent with this pattern, Glass *et al.* [3] found that LD risk increased with decreasing distance from forested land in Baltimore County, MD, and that neighborhoods with a high degree or spatial extent of development had a significantly diminished risk of disease. In Wisconsin, the distribution of human cases of LD reported between 1991 and 1994 was positively correlated with the extent of woody vegetation, as revealed by satellite imagery [4]. In suburban Westchester County, NY, residents of properties with non-vegetative cover or open lawn were at a diminished risk of LD relative to residents of wooded properties [5–7]. A similar pattern was observed by Jackson *et al.* [8], who found that the proportion of forested area was a predictor of heightened LD risk for residents across the state of Maryland. LD cases were also found to be less frequent in landscapes with more forest fragmentation in and around the original focus of infection (Lyme, CT [9]) and, at a coarser spatial resolution and larger spatial scale, across 37 eastern US states [10]. In the northeastern USA, the pattern of LD cases being concentrated in forested areas and largely absent from deforested environments appears to be robust (Figure 1a).

Field studies suggested a mechanism for the relationship between forested land and LD risk, demonstrating the importance of deer hosts for adult ticks, because such hosts must be present for ticks to complete their life cycle [29]. On Monhegan Island, ME, 13% of humans were infected with LD during the mid-1990s. Deer were deemed the most important host for adult ticks and were eliminated from the island, ultimately reducing health risks, whereas ticks increased at a control site where deer were not removed [30]. Many other examples of the dependence of ticks on deer exist, particularly when deer invade an area or increase from low density (e.g., [31]; see Table S1 in [32]), and such examples demonstrate that deer can amplify tick populations to such an extent that they increase disease risk.

When considering approaches for controlling LD, forest ecosystems became a target. Barbour and Fish [33] wrote, 'The threat of Lyme disease in wooded, suburban residential communities. . .has resulted in a new sense of conflict between humans and nature' and 'Ironically, the emergence of Lyme disease as a health problem is attributable in part to the "greening" of the United States.' Today, many ecologists and epidemiologists consider the link between forests and LD to be so strong that, among other options for disease control (e.g., personal protection against tick bites and acaricidal chemical applications), they have suggested clearing of vegetation, controlled burns, and culling of reservoir hosts as possible public health interventions [11,12]. In a medical review evaluating the efficacy of various preventive strategies, vegetation removal and deer culling were found to be highly successful at reducing LD risk, although cost-prohibitive for application at a large scale [34]. Another medical review identified broadcast acaricidal application as the most effective approach to environmental LD control, and advocated vegetation clearing and reservoir host culling as secondary options in certain contexts [35]. These strategies reduce LD risk by reducing tick density through targeted biodiversity destruction (e.g., of vegetation, hosts, or ticks themselves).

The dilution effect perspective

In 2000 and 2001, several papers [13,36,37] proposed a different view of LD transmission. Called the 'dilution effect', the new hypothesis argued that high biodiversity could actually protect humans from LD and other infectious diseases. Here, we use the inclusive definition of the dilution effect [19,38], which refers to scenarios in which biodiversity provides the ecosystem service of disease reduction. The dilution effect hypothesis has three important assumptions: (i) that reservoir hosts vary in competence (i.e., their ability to pass infection on to a feeding vector) for the LD spirochete; (ii) that a relative increase in noncompetent hosts leads to a lower prevalence of infection among ticks; and (iii) that increasing biodiversity favors noncompetent hosts over competent hosts (Figure 2b). A fourth implied assumption (one that is sometimes overlooked in the dilution effect literature) is that there is no substantial increase in tick density associated with the addition of noncompetent hosts. Reservoir host competence for the LD spirochete varies substantially across vertebrate host species, and the white-footed mouse is one of its most competent reservoirs in the northeastern and mid-western USA. The competence of the mouse is a product of both its ability to infect feeding ticks with the LD spirochete and its behavior toward feeding ticks, which is relatively permissive; other potential hosts (e.g., Virigina opossums, *Didelphis virginiana*) are more effective in grooming off and killing ticks that attempt to feed [39]. In addition to being a highly competent host for *B. burgdorferi*, the white-footed mouse is an ecological generalist, thriving in both pristine and impacted forests, which could enable it to constitute a greater proportion of the overall vertebrate community in low- relative to high-biodiversity ecosystems. If this were the case, and ticks feed on noncompetent hosts in addition to white-footed mice, increasing biodiversity could reduce transmission of the spirochete between mice and ticks. Thus, rather than putting human populations at

heightened risk of LD, high-biodiversity forested areas should have a lower risk of LD transmission compared with low-biodiversity forested areas. In other words, although forests support LD, there is variation among forests in their vertebrate biodiversity, which could in turn influence disease transmission. In particular, small forest patches can have lower vertebrate diversity than large forest patches (e.g., [40]), so that LD transmission should be highest in small patches.

Several mathematical models of the dilution effect have considered the relationship of biodiversity to LD risk. The first demonstrated that the addition of noncompetent hosts to a theoretical community could reduce LD transmission [14]. A subsequent model [15], parameterized with empirical data from a rural Millbrook, NY study system, found that infection prevalence in nymphal ticks might decline as the number of noncompetent host species increased. Later work [16] refined this model to show that realistic sequences of vertebrate species loss could differentially reduce the abundance of noncompetent hosts, resulting in increases in the prevalence of infection in nymphs. Although the results of these models are consistent, one important criticism is that the outcome of dilution is guaranteed, given the model assumptions [41]. Nonetheless, a few empirical tests are consistent with predictions from these models. For example, both nymphal infection prevalence and the density of infected nymphs declined with increasing forest fragment size across 14 maple forest patches (0.7–7.6 ha) in Millbrook, NY [17], although it should be noted that heightened densities of infected nymphs were observed only in the smallest (approximately 1 ha) forest fragments. Such studies suggested an indirect (or 'compound') negative path between forest fragment size (often assumed to be positively correlated with biodiversity) and disease risk (measured as the prevalence of infected ticks). Figure 1b illustrates the dilution effect, which anticipates that the relationship between biodiversity and/or forestation and disease risk will be opposite to that predicted by the traditional perspective. Papers in the conservation biology literature now commonly state that the dilution effect drives LD transmission [13,15,16,18,19,21–25], primarily citing the studies reviewed above.

Recent critique of the dilution effect has been formidable. In particular, Randolph and Dobson [41] argue that the dilution effect is 'panglossian' thinking on the part of conservation biologists – that is, premised on the unreasonable belief that biodiversity must always benefit human society. In addition to questioning the empirical evidence above, they note, among other things, the importance of distinguishing the diversity of hosts from the abundance of hosts and of distinguishing among types of diversity (e.g., functional diversity, species richness, and species evenness), the inevitability of the results of some of the mathematical models of the dilution effect, and the conflicting effects of biodiversity additions on pathogen dilution and vector amplification (discussed in detail below).

How convincing is the evidence for the dilution effect in the LD transmission cycle? Although tick density and prevalence decreased with forest fragment size in Millbrook, NY [17], no relationship was detected between forest fragment size and nymphal infection prevalence and only a weak negative relationship was detected between host species richness and nymphal infection prevalence across forest patches in New York, New Jersey, and Connecticut (40 forest fragments ranging from 0.3 ha to 19.0 ha) [18]. State-wide species richness of small mammals and state-wide LD incidence in humans were negatively correlated along the eastern seaboard of the USA [13], but the state-level resolution of the data introduces many potential confounding factors for this correlation, most notably latitude (greater species richness and less LD were found in the south relative to the north). In addition, variation in the area over which species richness was defined (larger states tend to contain more species) and the post-hoc exclusion of Florida (a state with low rates of LD and low diversity of small mammals and birds) as a datum reduce the certainty that this pattern represents a cause-and-effect relationship between diversity and disease.

Unfortunately, only one study [18] has used direct measures of biodiversity to study the dilution effect (showing a weak negative relationship between vertebrate species richness and nymphal infection prevalence); most studies have instead used habitat fragment size, white-footed mouse abundance, or other indirect measures as proxies for biodiversity (e.g., [17,18,42]). To account for this shortcoming, other studies are frequently cited to connect the proxy value to overall vertebrate diversity (e.g., [40,43–46]). However, none of the cited research has been conducted in the northeastern US forest ecosystems where the dilution effect has been studied in LD (i.e., primarily Millbrook, NY). Furthermore, there exist highly competent hosts of LD other than the white-footed mouse (e.g., short-tailed shrews, *Blarina brevicauda* and masked shrews, *Sorex cinereus* [47]), and their responses to biodiversity loss are likely to differ from that of the white-footed mouse, complicating predictions of the relationship between biodiversity and the proportion of competent hosts. The lack of evidence for a connection between biodiversity and white-footed mouse abundance has been highlighted previously [48] and the Virginia opossum, which has been suggested as the strongest sink for infected ticks [39], is a human-associated species [49]. Finally, papers in the dilution effect literature have tended to use habitat fragmentation as a proxy for vertebrate host diversity and, although fragmentation might drive down diversity of small forest mammals within plots, the ecotones introduced by fragmentation can add to overall diversity at larger (between-plot) spatial scales. In short, evidence for the link between biodiversity and the proportion of competent hosts (a key precondition for the dilution effect) is still equivocal. What is clear is that black-legged ticks can benefit from a diversity of hosts. Specifically, immature ticks fare better on small vertebrate hosts, whereas adult ticks are more successful on large hosts [25]. Therefore, the tick life cycle should be easier to complete in a diverse system with large and small hosts. Such ontogenetic niche shifts can make consumers such as ticks sensitive to biodiversity loss (see [50]), contrary to the predictions of the dilution effect.

A further challenge in demonstrating the dilution effect is that most studies testing it use indirect measures of disease risk to humans [41]. Many papers on the dilution

effect (e.g., [15,16,18]) focus on nymphal infection prevalence, whereas the most important metric for approximating human disease risk from tick population data is the density of infected nymphs. Tracking the density of infected nymphs is important because models suggest that if 'diluting' hosts also 'amplify' tick populations, a positive relationship between diversity and the density of infected ticks results, even if prevalence of infection decreases (see Figure 6 in [37]). Ogden and Tsao [38] present a mechanistic model that explores whether increases in biodiversity will 'dilute' LD risk (measured as density of infected nymphs) or 'amplify' it by subsidizing the tick population and producing increases in tick density (which counterbalance reductions in nymphal infection prevalence). They conclude that either outcome is possible, depending on the values of key parameters, and several empirical studies (reviewed below) bear this out. More general models indicate that increased biodiversity can lead to both a decrease in the prevalence of infection and an increase in the total number of infected hosts [51].

Using spatial scale to reconcile divergent perspectives on biodiversity and LD risk

Aside from the scientific issues with the dilution effect studies outlined above, we suggest that the traditional and dilution effect perspectives lead to opposite predictions about the effect of forestation and/or biodiversity on LD risk because they focus on variation in risk at different spatial resolutions. Whereas studies of the dilution effect tend to compare LD risk among sites within forested areas, papers with an epidemiological focus have traditionally investigated LD risk across a broad range of land-use types (urban to suburban to rural). There are numerous studies from across the northeastern USA documenting positive spatial correlations between forested land and human cases of LD (reviewed above; [2–10]). These studies demonstrate that, at coarse spatial resolutions, risk of LD increases as forestation increases. However, what is the relationship of human LD risk to biodiversity at a finer spatial resolution, within forests? If the dilution effect governs LD transmission within this truncated portion of the gradient of human disturbance, one might expect a curvilinear relationship across the entire gradient, in which risk to humans increased with forestation until it reached an inflection point, where increasingly biodiverse forest communities begin to buffer against transmission through the dilution effect. One study tested this by correlating the degree of forest fragmentation with human LD cases across the state of Connecticut [9]. However, this study found the opposite of what the dilution effect would predict: the number of human cases of LD was lower in regions with small forest fragments than in regions with large forest fragments, even though the small forest fragments contained a greater density of infected nymphs than did large forest fragments. This is probably because most LD infections are contracted peridomestically, and greater fragmentation means less forested area adjacent to residential property (the less forest there is, the lower the LD risk, regardless of the biodiversity contained in the nearby forest). This consideration of spatial resolution is key to understanding how biodiversity and forestation mediate the human risk for LD.

The importance of temporal scale in measuring response of LD risk to changes in biodiversity

One dynamic that models cannot easily consider is the potential effect of rapid changes in biodiversity on the density of questing ticks (i.e., ticks in search of a blood meal; [52]). If questing ticks do not find a suitable wild host, their abundance builds up, making encounters with humans more likely. This is best illustrated with the example of oak mast in the northeastern US forests where LD has been well studied. Oak acorn production is naturally variable, with oak trees synchronously producing large quantities of acorns every few years, and few or no acorns in the intervening years (e.g., [53]). In years when acorn production is high, the abundance of rodents and deer that feed on acorns increases, producing a concomitant increase in the abundance of ticks on those hosts [54]. When acorn production inevitably fails in subsequent years, rodent populations crash, deer disperse from oak forests, and a generation of questing ticks must wait longer for scarce hosts [54]. In these years, humans may experience a higher rate of encounter with ticks, because there will be many unfed ticks searching for vertebrate hosts. Most of these ticks will starve, so that tick densities decline in subsequent years, leading to considerable annual variation in LD risk. A similar transient dynamic occurs when noncompetent hosts decline. After the deer eradication discussed above, adult tick density in vegetation increased (presumably because the ticks were questing instead of feeding on deer hosts), before declining dramatically [30]. These results are consistent with mathematical models showing that deer removal can temporarily increase questing tick density [52]. It is easy to imagine how rapid changes in biodiversity could produce mismatches between tick abundance and availability of wild host blood meals, which would either increase or decrease the number of questing ticks that represent a risk to humans. Although this effect would be highly transient, it could have important effects on human health.

A unified perspective on the relationship of biodiversity to LD risk

Papers on LD have reached divergent conclusions because their different perspectives, although built on logical causal paths, are incomplete. Many recent studies have recognized the need to combine perspectives [9,30,33,37,38,41,48,55,56] (Figure 1c). The resulting synthesis is, by necessity, more complex. It has 12 paths from forestation and/or biodiversity to human health risk, including some paths with ambiguous signs. Due to the mixture of positive, negative, and ambiguous compound paths, it is impossible to predict the net effect of forestation and/or biodiversity without knowing the relative strengths of the paths. All paths can be supported by logical hypotheses, but not all have been empirically tested. This complex set of paths indicates that, to predict human health risks, it is first necessary to know: (i) how forestation affects the abundance of different hosts for ticks; and (ii) the relative strengths of transmission reduction and vector amplification in noncompetent hosts. These relationships could easily be scale dependent or nonlinear in space and time.

This synthetic perspective is not committed to directional predictions about the effect of forestation or biodiversity

on the abundance of competent and noncompetent hosts: forest recovery can increase or decrease the density of competent hosts such as mice, which increase nymphal infection prevalence and the density of ticks, or it can increase or decrease the density of noncompetent hosts such as deer, which amplify tick density. The net effect of noncompetent hosts on LD risk in humans would, therefore, depend on the relative strengths of these effects. More detailed models of LD parameterized from field data suggest that vector amplification from noncompetent hosts is stronger than dilution effects [38]. In a recent example from the western USA, where the LD spirochete is vectored by the tick *Ixodes pacificus*, competent reservoir hosts, such as the dusky-footed woodrat (*Neotoma fuscipes*), western grey squirrel (*Sciurus griseus*), California kangaroo rat (*Dipodomys californicus*), and deer mouse (*Peromyscus maniculatus*), maintain the pathogen, whereas juvenile tick populations mainly feed on a noncompetent host, the western fence lizard *Sceloporus occidentalis*. Experimental removal of noncompetent lizard hosts resulted in no change in prevalence among tick vectors (i.e., no increase in transmission due to the removal of noncompetent hosts), but a marked decrease in vector density [55]. This led to an overall decrease in the density of infected ticks in response to removal of the noncompetent host. In another empirical example from the same system, forest disturbance (by the invasive sudden oak death pathogen) increased the abundance of noncompetent lizard hosts, which had a positive effect on the density of ticks, although the density of infected ticks remained the same due to a reduction in transmission to ticks [56]. A synthetic perspective is also responsive to differences in competence among hosts; forest vertebrates other than the most competent, even those with low reservoir competence, might contribute a substantial proportion of infections in ticks if they provide a disproportionate number of blood meals for ticks [47,57,58].

This synthesis also highlights the need to understand food-web dynamics relevant to the LD transmission cycle. For instance, in the northeastern and mid-western USA, changes in habitat have led to expansions in the range of coyote (*Canis latrans*) [59], and these changes are spatially correlated with increases in human LD cases [32]. A simple explanation is that post-agricultural expansion of a suburban mosaic of wooded areas and residential properties facilitates both coyotes and LD risk. Alternatively, it is hypothesized that coyotes indirectly affect LD risk due to trophic cascades through the food web [32]. Coyotes, which feed on and interfere with mesopredators, such as red fox (*Vulpes vulpes*) [32], are associated with increases in the abundance and diversity of small mammals that would otherwise be prey for foxes [60,61]. In the absence of foxes, these small mammals might attain high densities, increasing LD risk for humans. This would suggest a positive association between restoration of a predator and LD risk. How might further restoration of carnivores affect the food web in this system? Gray wolves (*Canis lupus*), which prey on coyotes, were extirpated from eastern North America by 1900 [62]. Their recovery would likely decrease deer populations (reducing tick amplification), but could also have indirect (positive or negative) effects on rodent populations, leading to unpredictable changes in LD transmission. This example serves to highlight that a synthetic perspective should take into account the complexities of the food webs in which the LD cycle is embedded.

A synthetic perspective also permits scale-dependent predictions. Because host availability removes questing ticks, reducing the abundance of any host can temporarily increase the density of such ticks. If noncompetent hosts are disproportionately removed, those questing ticks are more likely to be infected because they will feed on competent hosts, leading to a dilution effect ('inclusively' defined; [19]). This dilution effect would be transient, however, and the loss of hosts for ticks would eventually reduce tick density and human health risk, consistent with the traditional view that reduction in noncompetent hosts reduces LD risk.

Conservation and disease control

Reviews of the dilution effect have often cited LD as the principal evidence for the conclusion that biodiversity protects human populations against infectious disease

Box 2. Implications for other zoonotic diseases

This synthesis focuses on the hypothesis that biodiversity protects humans against LD, but might biodiversity protect against other zoonoses? Here, we briefly discuss another disease in which the dilution effect has been tested: hantavirus pulmonary syndrome. We highlight ways in which the approach we used for LD (consideration of spatial resolution) might shed light on the nature of the biodiversity–disease relationship for hantavirus and, by extension, other zoonotic disease agents.

In 1993, dozens of humans in the Four Corners region of the southwestern USA died of hantavirus pulmonary syndrome, a disease new to the region [77]. As in LD, the sudden emergence of hantavirus in the western hemisphere initially suggested a recent introduction, but later research showed that the species of *Hantavirus* circulating in North America had a long evolutionary history in the region and that most humans were tolerant to infection [78]. The transmission cycle is much simpler than in LD. Hosts are rodents of the family Muridae, and exposure occurs via aerosolized virus from rodent urine, feces, or saliva [77], with the primary predictors of human infection risk being the density of infected rodent reservoirs combined with the permeability of human dwellings to rodents [78]. In the wake of the 1993 outbreak, disease ecologists sought to test the hypothesis that anthropogenic biodiversity loss might drive heightened risk of hantavirus infection. Several studies support a dilution effect for hantavirus. For example, prevalence among the most competent rodent hosts of Sin Nombre hantavirus (*Peromyscus maniculatus*) was higher in species-poor assemblages, probably due to increased intraspecific contact rates (e.g., [79]). However, as in LD, spatial resolution is an important consideration in defining the relationship between biodiversity and hantavirus risk. For instance, 94% of those affected by the 1993 outbreak in the southwestern USA lived in rural areas, and the remaining 6% visited rural areas on weekends [80]. This suggests that, over broad spatial gradients (urban to suburban to rural), hantavirus risk might increase with biodiversity, whereas at finer resolution within more intact (in this case, rural) areas, biodiversity might dilute disease risk. Further analysis is necessary to characterize fully the relationship between biodiversity and hantavirus risk across spatial scales, but this example highlights the danger of extrapolating from a truncated range of human disturbance or from the small spatial scales most convenient for ecological study. Future research in other zoonotic disease systems should include study areas at highly divergent levels of human disturbance.

(e.g., [16,19,21–25]). This is part of a growing effort to market conservation actions based on the utilitarian services that biodiversity can provide for human society. Dilution is a logical outcome under some circumstances, particularly for short periods of time and at small spatial scales. It is understandable that conservation biologists would support a win–win solution for biodiversity and human society, but such generalizations seem premature for disease control, at least for long-term, large-scale biodiversity loss (Box 2). Although the conservation of biodiversity is desirable for many reasons, our synthesis suggests that biodiversity in general does not offer consistent protection against zoonotic disease. Instead, it emphasizes that there are several ecological opportunities for reducing the risk of LD to humans. Apart from the inadvisable approach of deforestation (an LD control strategy tantamount to 'throwing the baby out with the bathwater') or separating humans from nature, authorities might aim to disrupt directly or indirectly those paths to which LD transmission is most sensitive, specifically, populations of deer and white-footed mice. To the extent that these ends can be accomplished through ecological restoration of noncompetent and nonamplifying hosts, the better.

Concluding remarks

Evidence or logical arguments support all the proposed paths in Figure 1c, but their relative strengths are unclear. Despite the uncertainty of the individual paths, the empirical evidence is most consistent with a positive indirect effect of forestation on LD risk in humans (Figure 2c). Spatial correlations between forested land and human LD cases have been demonstrated across the northeastern USA at a variety of scales and resolutions (e.g., [2–10]). The only effective means of environmental management ever deployed against LD has been active suppression of native vertebrate species (e.g., [30]) or their habitat (e.g., [63]). In addition, the history of LD suggests that it is a disease that resurged only when forests were restored after long periods of extensive agricultural use (Box 1). Although the potential for a curvilinear relationship between forestation or biodiversity and LD risk should be investigated, most evidence currently available points to a monotonic increase in disease risk with increasing biodiversity. This evidence argues against the use of biodiversity conservation for LD control, but provides a means for more targeted ecologically based solutions. The example of LD has been used to argue that the dilution effect might govern the transmission of many zoonotic disease agents, but our conclusions should prompt a re-evaluation of this link. Instead, we suggest that, as in LD, biodiversity–disease relationships for other zoonotic diseases are likely to be complex and scale dependent, and that they might be negative, positive, or neutral, depending on scale and ecological context.

Acknowledgments

C.L.W. was supported by a National Science Foundation Graduate Research Fellowship and an Alyce B. and Henry J. Ramey, Jr. Stanford Graduate Fellowship. Uriel Kitron, Dan Salkeld, Andrea Swei, and six anonymous reviewers made helpful comments on earlier versions of this manuscript.

References

1 Bacon, R.M. *et al.* (2008) Surveillance for Lyme disease: United States, 1992–2006. *Morbidity and Mortality Weekly Report* 57, 1–9
2 Lastavica, C.C. *et al.* (1989) Rapid emergence of a focal epidemic of Lyme disease in coastal Massachusetts. *N. Engl. J. Med.* 320, 133–137
3 Glass, G.E. *et al.* (1995) Environmental risk factors for Lyme disease identified with geographic information systems. *Am. J. Public Health* 85, 944–948
4 Kitron, U. and Kazmierczak, J.J. (1997) Spatial analysis of the distribution of Lyme disease in Wisconsin. *Am. J. Epidemiol.* 145, 558–566
5 Maupin, G.O. *et al.* (1991) Landscape ecology of Lyme disease in a residential area of Westchester County, New York. *Am. J. Epidemiol.* 133, 1105–1113
6 Dister, S.W. *et al.* (1997) Landscape characterization of peridomestic risk for Lyme disease using satellite imagery. *Am. J. Trop. Med. Hyg.* 57, 687–692
7 Frank, D.H. *et al.* (1998) Landscape features associated with Lyme disease risk in a suburban residential environment. *Landscape Ecol.* 13, 27–36
8 Jackson, L.E. *et al.* (2006) Towards landscape design guidelines for reducing Lyme disease risk. *Int. J. Epidemiol.* 35, 315–322
9 Brownstein, J.S. *et al.* (2005) Forest fragmentation predicts local scale heterogeneity of Lyme disease risk. *Oecologia* 146, 469–475
10 Diuk-Wasser, M.A. *et al.* (2012) Human risk of infection with *Borrelia burgdorferi*, the Lyme disease agent, in eastern United States. *Am. J. Trop. Med. Hyg.* 86, 320–327
11 Stafford, K.C. and Kitron, U. (2002) Environmental management for *Lyme Borreliosis*. In Lyme Borreliosis*: Biology, Epidemiology, and Control* (Gray, J., ed.), pp. 301–334, CABI Publishing
12 Wilson, M.L. and Deblinger, R.D. (1993) Vector management to reduce the risk of Lyme disease. In *Ecology and Environmental Management of Lyme Disease* (Ginsberg, H.S., ed.), pp. 126–156, Rutgers University Press
13 Ostfeld, R.S. and Keesing, F. (2000) Biodiversity and disease risk: the case of Lyme disease. *Conserv. Biol.* 14, 722–728
14 van Buskirk, J. and Ostfeld, R.S. (1995) Controlling Lyme disease by modifying the density and species composition of tick hosts. *Ecol. Appl.* 5, 1133–1140
15 LoGiudice, K. *et al.* (2003) The ecology of infectious disease: effects of host diversity and community composition on Lyme disease risk. *Proc. Natl. Acad. Sci. U.S.A.* 100, 567–571
16 Ostfeld, R.S. and LoGiudice, K. (2003) Community disassembly, biodiversity loss, and the erosion of an ecosystem service. *Ecology* 84, 1421–1427
17 Allan, B.F. *et al.* (2003) Effect of forest fragmentation on Lyme disease risk. *Conserv. Biol.* 17, 267–272
18 LoGiudice, K. *et al.* (2008) Impact of host community composition on Lyme disease risk. *Ecology* 89, 2841–2849
19 Keesing, F. *et al.* (2006) Effects of species diversity on disease risk. *Ecol. Lett.* 9, 485–498
20 Cook, A. *et al.* (2004) Using human disease outbreaks as a guide to multilevel ecosystem interventions. *Environ. Health Perspect.* 112, 1143–1146
21 Keesing, F. and Ostfeld, R.S. (2012) An ecosystem service of biodiversity: the protection of human health against infectious disease. In *New Directions in Conservation Medicine: Applied Cases of Ecological Health* (Aguirre, A.A. *et al.*, eds), pp. 56–66, Oxford University Press
22 Keesing, F. *et al.* (2010) Impacts of biodiversity on the emergence and transmission of infectious diseases. *Nature* 468, 647–652
23 Dobson, A. *et al.* (2006) Sacred cows and sympathetic squirrels: the importance of biological diversity to human health. *PLoS Med.* 3, e231
24 Pongsiri, M.J. *et al.* (2009) Biodiversity loss affects global disease ecology. *BioScience* 59, 945–954
25 Vourc'h, G. *et al.* (2012) How does biodiversity influence the ecology of infectious disease? In *New Frontiers of Molecular Epidemiology of Infectious Diseases* (Morand, S. *et al.*, eds), pp. 291–309, Springer
26 Anderson, J.F. (1988) Mammalian and avian reservoirs for *Borrelia burgdorferi*. *Ann. N. Y. Acad. Sci.* 539, 180–191
27 Piesman, J. (1989) Transmission of Lyme disease spirochetes (*Borrelia burgdorferi*). *Exp. Appl. Acarol.* 7, 71–80

28 Wallis, R.C. *et al.* (1978) Erythema chronicum migrans and Lyme arthritis: field study of ticks. *Am. J. Epidemiol.* 108, 322–327
29 Eisen, R.J. *et al.* (2012) What do we need to know about disease ecology to prevent Lyme disease in the northeastern United States? *J. Med. Entomol.* 49, 11–22
30 Rand, P.W. *et al.* (2004) Abundance of *Ixodes scapularis* (Acari: Ixodidae) after the complete removal of deer from an isolated offshore island, endemic for Lyme disease. *J. Med. Entomol.* 41, 779–784
31 Gilbert, L. *et al.* (2012) The effect of deer management on the abundance of *Ixodes ricinus* in Scotland. *Ecol. Appl.* 22, 658–667
32 Levi, T. *et al.* (2012) Deer, predators, and the emergence of Lyme disease. *Proc. Natl. Acad. Sci. U.S.A.* 109, 10942–10947
33 Barbour, A.G. and Fish, D. (1993) The biological and social phenomenon of Lyme disease. *Science* 260, 1610–1616
34 Poland, G.A. (2001) Prevention of Lyme disease: a review of the evidence. *Mayo Clin. Proc.* 76, 713–724
35 Hayes, E.B. and Piesman, J. (2003) How can we prevent Lyme disease? *N. Engl. J. Med.* 348, 2424–2430
36 Ostfeld, R. and Keesing, F. (2000) The function of biodiversity in the ecology of vector-borne zoonotic disease. *Can. J. Zool.* 78, 2061–2078
37 Schmidt, K.A. and Ostfeld, R.S. (2001) Biodiversity and the dilution effect in disease ecology. *Ecology* 82, 609–619
38 Ogden, N.H. and Tsao, J.I. (2009) Biodiversity and Lyme disease: dilution or amplification? *Epidemics* 1, 196–206
39 Keesing, F. *et al.* (2009) Hosts as ecological traps for the vector of Lyme disease. *Proc. R. Soc. B* 276, 3911–3919
40 Andren, H. (1994) Effects of habitat fragmentation on birds and mammals in landscapes with different proportions of suitable habitat: a review. *Oikos* 71, 355–366
41 Randolph, S. and Dobson, A.D.M. (2012) Pangloss revisited: a critique of the dilution effect and the biodiversity-buffers-disease paradigm. *Parasitology* 139, 847–863
42 Ostfeld, R.S. *et al.* (2001) Effects of acorn production and mouse abundance on abundance and *Borrelia burgdorferi* infection prevalence of nymphal *Ixodes scapularis* ticks. *Vector Borne Zoonotic Dis.* 1, 55–63
43 Bender, D.J. *et al.* (1998) Habitat loss and population decline: a meta-analysis of the patch size effect. *Ecology* 79, 517–533
44 Nupp, T.E. and Swihart, R.K. (1998) Effects of forest fragmentation on population attributes of white-footed mice and eastern chipmunks. *J. Mammol.* 79, 1234–1243
45 Rosenblatt, D.L. *et al.* (1999) Forest fragments in east-central Illinois: islands or habitat patches for mammals. *Am. Midl. Nat.* 141, 115–123
46 Tallmon, D.A. *et al.* (2003) Of mice and men and *Trillium*: cascading effects of forest fragmentation. *Ecol. Appl.* 13, 1193–1203
47 Brisson, D. *et al.* (2008) Conspicuous impacts of inconspicuous hosts on the Lyme disease epidemic. *Proc. R. Soc. B* 275, 227–235
48 Begon, M. (2008) Effects of host diversity on disease dynamics. In *Infectious Disease Ecology: Effects of Ecosystems on Disease and of Disease on Ecosystems* (Ostfeld, R.S. *et al.*, eds), pp. 12–30, Princeton University Press
49 Markovchick-Nicholls, L. *et al.* (2008) Relationships between human disturbance and wildlife land use in urban habitat fragments. *Conserv. Biol.* 22, 99–109
50 Rudolf, V.H.W. and Lafferty, K.D. (2010) Stage structure alters how complexity affects stability of ecological networks. *Ecol. Lett.* 14, 75–79
51 Roche, B. *et al.* (2012) Linking community and disease ecology: the impact of biodiversity on pathogen transmission. *Philos. Trans. R. Soc. B* 367, 2807–2813
52 Dobson, A.D.M. and Randolph, S.E. (2011) Modelling the effects of recent changes in climate, host density and acaricide treatments on population dynamics of *Ixodes ricinus* in the UK. *J. Appl. Ecol.* 48, 1029–1037
53 Sork, V.L. *et al.* (1993) Ecology of mast-fruiting in three species of North American deciduous oaks. *Ecology* 74, 528–541
54 Ostfeld, R.S. *et al.* (1996) Of mice and mast: ecological connections in eastern deciduous forests. *BioScience* 46, 323–330
55 Swei, A. *et al.* (2011) Impact of the experimental removal of lizards on Lyme disease risk. *Proc. R. Soc. B* 278, 2970–2978
56 Swei, A. *et al.* (2011) Effects of an invasive forest pathogen on abundance of ticks and their vertebrate hosts in a California Lyme disease focus. *Oecologia* 166, 91–100
57 Tsao, J.I. *et al.* (2004) An ecological approach to preventing human infection: vaccinating wild mouse reservoirs intervenes in the Lyme disease cycle. *Proc. Natl. Acad. Sci. U.S.A.* 101, 18159–18164
58 Ginsberg, H.S. *et al.* (2005) Reservoir competence of native North American birds for the Lyme disease spirochete, *Borrelia burgdorferi*. *J. Med. Entomol.* 42, 445–449
59 Gompper, M.E. (2002) The ecology of northeast coyotes: current knowledge and priorities for future research. *Wildlife Conservation Society Working Paper*, 17
60 Crooks, K.R. and Soulé, M.E. (1999) Mesofauna release and avifaunal extinctions in a fragmented system. *Nature* 400, 563–567
61 Levi, T. and Wilmers, C.C. (2012) Wolves–coyotes–foxes: a cascade among carnivores. *Ecology* 93, 921–929
62 Paquet, P.C. and Carbyn, L.N. (2003) Gray wolf: *Canis lupus* and allies. In *Wild Mammals of North America: Biology, Management and Conservation* (Feldhamer, G.A. *et al.*, eds), pp. 482–510, The Johns Hopkins University Press
63 Spielman, A.A. (1988) Prospects for suppressing transmission of Lyme disease. *Ann. N. Y. Acad. Sci.* 539, 212–220
64 Steere, A.C. *et al.* (1977) Lyme arthritis: an epidemic of oligoarticular arthritis in children and adults in three Connecticut communities. *Arthritis Rheum.* 20, 7–17
65 Buchwald, A. (1883) Ein Fall von diffuser idiopathischer Haut-Atrophie. *Arch. Dermatol. Syphilol.* 10, 553–556
66 Keller, A. *et al.* (2012) New insights into the Tyrolean Iceman's origin and phenotype as inferred by whole–genome sequencing. *Nat. Commun.* 3, 698
67 Persing, D.H. *et al.* (1990) Detection of *Borrelia burgdorferi* DNA in museum specimens of *Ixodes dammini* ticks. *Science* 249, 1420–1423
68 Steere, A.C. (1989) Lyme disease. *N. Engl. J. Med.* 321, 586–596
69 Kalm, P. (1771) *Travels into North America*, J.R. Forster
70 Fitch, A. (1872) *Reports on the Noxious, Beneficial and Other Insects, of the State of New York: Made to the State Agricultural Society, Pursuant to an Annual Appropriation for this Purpose from the Legislature of the State*, New York State Agricultural Society
71 Cronon, W. (1983) *Changes in the Land: Indians, Colonists, and the Ecology of New England*, Hill and Wang
72 Sigal, L.H. and Curran, A.S. (1991) Lyme disease: a multifocal worldwide epidemic. *Annu. Rev. Public Health* 12, 85–109
73 Anastos, G. (1947) Hosts of certain New York ticks. *Psyche* 54, 178–179
74 Marshall, W.F., III *et al.* (1994) Detection of *Borrelia burgdorferi* DNA in museum specimens of *Peromyscus leucopus*. *J. Infect. Dis.* 170, 1027–1032
75 Margos, G. *et al.* (2012) Two boundaries separate *Borrelia burgdorferi* populations in North America. *Appl. Environ. Microbiol.* 78, 6059–6067
76 Nutall, G.H.F. and Warburton, C. (1911) Ixodidae. In *Ticks: A Monograph of the Ixodoidea* (Nutall, G.H.F. *et al.*, eds), pp. 105–348, Cambridge University Press
77 Centers for Disease Control (1993) Outbreak of acute illness: southwestern US, 1993. *Morbidity and Mortality Weekly Report* 42, 421–424
78 Yates, T.L. *et al.* (2002) The ecology and evolutionary history of an emergent disease: hantavirus pulmonary syndrome. *BioScience* 52, 989–998
79 Clay, C.A. *et al.* (2009) Testing mechanisms of the dilution effect: deer mice encounter rates, Sin Nombre virus prevalence and species diversity. *Ecohealth* 6, 250–259
80 Zeitz, P.S. *et al.* (1995) A case-control study of Hantavirus Pulmonary Syndrome during an outbreak in the southwestern United States. *J. Infect. Dis.* 171, 864–870